DMD3030D Part Number : 21000-C2GG0

MSRP : $ 117.82

Rod Size 5.75" : $117.54
Rod Size 9.75" : $117.74
Rod Size 10.00" : $117.82
Rod Size 12.25" : $132.62

General | Features & Benefit | Technical Data | Cross Reference

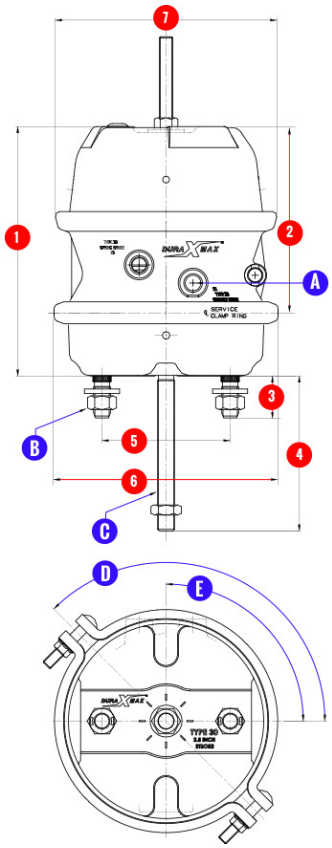

	DMD 3030D
SIZE	3030
STROKE	2.5" (63.5mm)
Wt. lb (kg)	20lb(9.14kg)
1	9.05"/230mm
2	6.71"/171mm
3	1.55±0.05" / 39.5±1.3mm
4	10±0.100" / 254±2.54mm
4 (DMD3030D-575)	5.75±0.100" / 254±2.54mm
4 (DMD3030D-975)	9.75±0.100" / 254±2.54mm
4 (DMD3030D-Intraxx)	12.25±0.100" / 254±2.54mm
5	4.75±0.05" / 120.65±1.5mm
6	8.3"/211mm
7	8.3"/211mm
A (PORT)	3/8 -18NPTF
B (MTG BOLT)	5/8-11-UNC-2A
C (P/ROD)	5/8-18-UNF-2A
HOLD-OFF	6.2bar/89.9psi

Note

1. DIMENSION "4" MEASURED WITH MAIN SPRING COMPRESSED PNEUMATICALLY
2. PRODUCT PERFORMANCE MEET SAE J2318 STANDARD.
3. PRODUCT COMPLIANCE TO FMVSS121 REGULATIONS